Dept / Qty	
DC	1
ED	1
IE	1
ISO	1
PD	1
R&D	1
SD	1
QA	1
QC	1
QE	1

REV.	DESCRIPTION	DRAWN	CHECKED	APPROVED
A	NEW RELEASE	LJC 04/27/05'		LJC 04/27/05'
E	DRAWING UPDATE	JLZ 08/21/18'		

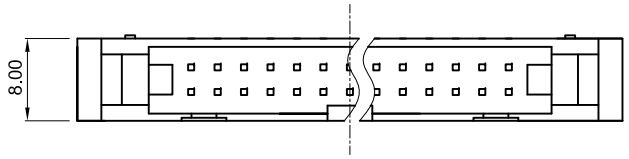

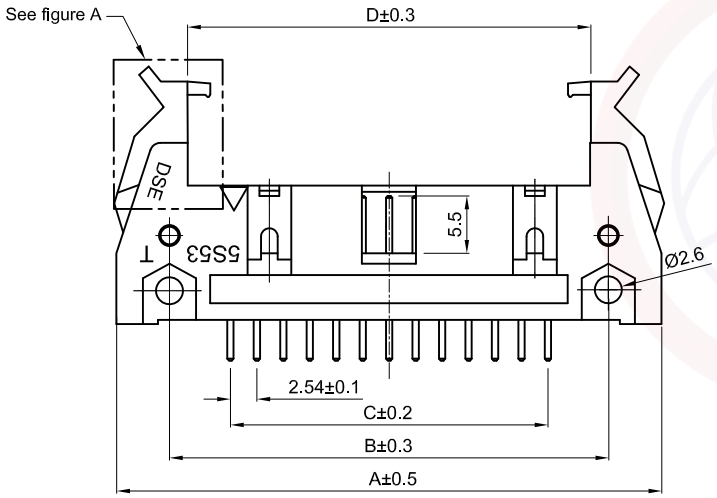

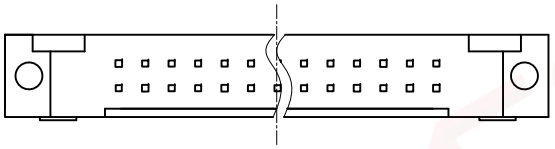

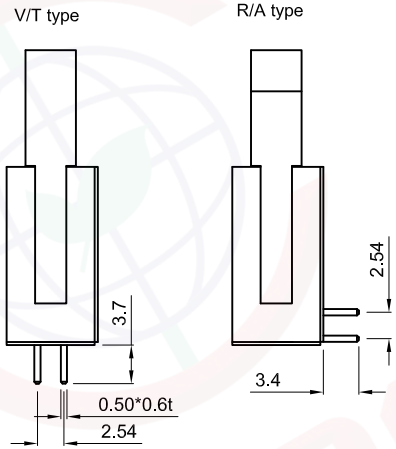

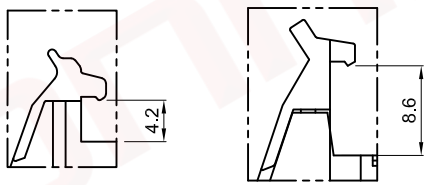

Short latch

Standard latch

NOTES:

1. Electrical characteristics:
   - 1.1 Contact resistance: 20mΩ Max. Initial.
   - 1.2 Dielectric withstanding voltage: 500V AC(rms) FOR 1 MINUTE.
   - 1.3 Insulation resistance: 1000MΩ Min.
2. Environment characteristics:
   - 2.1 Temperature: -40°C~+105°C.
3. Product number code:

DS1011-01- X X X X X X

- Lock DIM.
  - 8: 8.60mm(standard latch)
  - 2: 4.20mm(short latch)
- Housing color
  - B: Black
  - A: Gray
- Contact plating
  - Ti: Selective gold flash
  - Si: Full gold flash
- Housing type
  - S: Small latch housing
- Mounting type
  - S: Straight type
  - R: R/A type
- No.of contacts
  - 10 14 16 20 26 30
  - 34 40 50 60 64

Avaliable dimension table

No.of Contacts	10	14	16	20	26	30	34	40	50	60	64
A	31.92	37.00	39.54	44.62	52.24	57.32	62.40	70.02	82.72	95.42	100.50
B	21.72	26.80	29.34	34.42	42.04	47.12	52.20	59.82	72.52	85.22	90.30
C	10.16	15.24	17.78	22.86	30.48	35.56	40.64	48.26	60.96	73.66	78.74
D	18.22	23.30	25.84	30.92	38.54	43.62	48.70	56.32	69.02	81.72	86.80

(Series Image-Reference Only)

GENERAL TOLERANCE		ANGLE TOLERANCE	
X.	±0.60	X.	±5°
.X	±0.38	.X	±3°
.XX	±0.25	.XX	±2°

DRAWING TYPE	CUSTOMER		
SCALE	1:1	SHEET	1 OF 1
DRAWING NO.	C-DS1011-01-XXSXXX-E		

PROJECTION		TITLE	SHOUDED HEADER PITCH 2.54mm
UNITS	mm		
SHEET SIZE	A4	SERIES	DS1011-01 SERIES

晨翔电子有限公司

CONNFLY CONNFLY ELECTRONIC CO. LTD

The information provided herein is from CONNFLY Electronic Co., Ltd. and is confidential. Any disclosure to a party other than the recipient is prohibited. The intellectual properties and its rights contained herein, including but not limited to, trademarks, patents, copyrights, trade secrets, and technical know-how, are owned exclusively by CONNFLY or its affiliates. Unauthorized use or modification is strictly prohibited without prior written consent from CONNFLY. All intellectual properties provided herein are for reference purposes only and does not constitute authorization of its use in any format or manner. CONNFLY may enforce its intellectual property rights at its own discretion; failures or delays to exercise such rights does not constitute a waiver of such rights.